WATERMARK

BROOKLYN, NEW YORK

Paris

206-7.6-S1

Deck Mounted, Bridge Kitchen Faucet with Side Spray

- Fits Deck Up To 1-1/2” Thick
- Recommended Mounting Hole: 1-1/8”
- All Lead-Free Brass Construction
- Flow Rate: 1.75 GPM
- 1/4 Turn Ceramic Cartridge
- 360° Rotating Spout
- Professional Installation Required

Available in all finishes shown on the Watermark Designs website

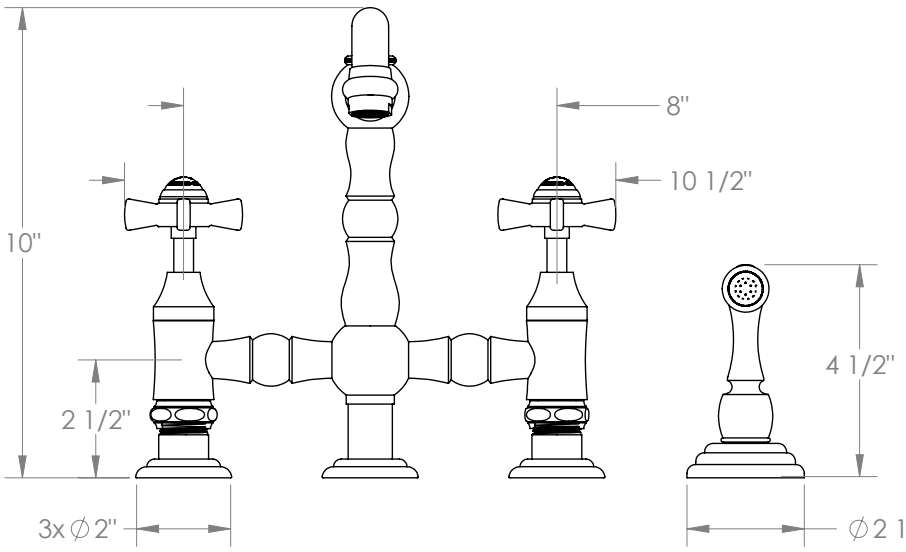

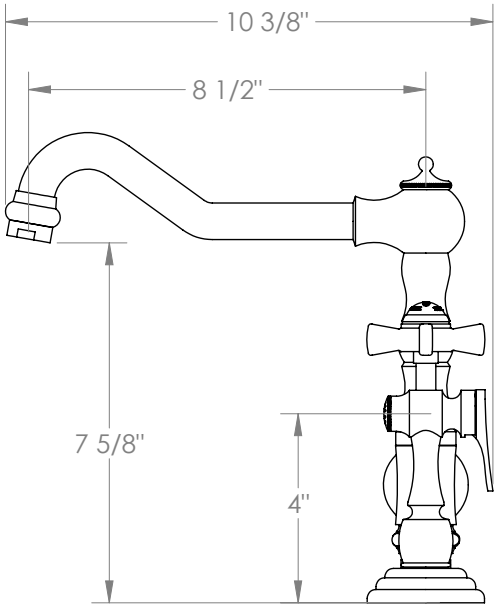

Meets the applicable requirements of ASME A112.18.1-2005/CSA B125.1-05, entitled “Plumbing Supply Fittings”.
Watermark Designs reserves the right to make revisions without notice to produce specifications. All product dimensions are nominal.

09/2023

350 Dewitt Ave. Brooklyn, NY 11207 USA | T: 1 718 257 2800 | F: 1 718 257 2144 | customerservice@watermark-designs.com